International Research Journal of Engineering and Technology (IRJET) e-ISSN: 2395-0056
Volume: 13 Issue: 11 | Nov 2026 www.irjet.net p-ISSN: 2395-0072

Finite Element Based Comparative Static Structural Analysis of a Flywheel Made of Cast Iron, Mild Steel and Aluminium

Nitin Borse[1], Ganesh Dongre[2], Vedant Suryawanshi[3], Shlok Raskar[4], Rohit Ramteke[5], Pallavi Wagh[6]

[12]*Professor, Dept. of Mechanical Engineering, Vishwakarma Institute of Technology, Pune, Maharashtra, India*
[3456]*Student, Dept. of Mechanical Engineering, Vishwakarma Institute of Technology, Pune, Maharashtra, India*

Abstract - *A flywheel stores rotational kinetic energy and gives it back to the system when the driving torque drops, which keeps the speed of engines, presses and other reciprocating machines steady. How well it performs under rotation depends heavily on the material it is made from. In this work a flywheel of 200 mm outer diameter, 50 mm face width and 70 mm hub diameter was modelled in SolidWorks and analysed in ANSYS 2026 R1 Student using the static structural module. Cast iron, mild steel and aluminium were compared while the geometry, mesh, support and rotational loading were kept identical. For each material four result quantities were recorded: total deformation, equivalent elastic strain, equivalent von Mises stress and normal stress along the X axis. Cast iron showed the largest peak deformation at 0.000172 mm, while mild steel and aluminium showed about 0.000101 mm and 0.000098 mm. The highest equivalent stress occurred in mild steel at 0.812 MPa, followed by cast iron at 0.745 MPa and aluminium at 0.279 MPa. In every case the peak stress appeared around the bolt holes nearest to the hub and the largest displacement appeared at the rim. All stresses were several hundred times lower than the strength of the respective material, so none of the three designs is at risk. Aluminium gave the lightest flywheel with the lowest stress, whereas cast iron and mild steel offer more mass and therefore more inertia for energy storage.*

Key Words: Flywheel, Static structural analysis, ANSYS, Von Mises stress, Total deformation, Cast iron, Mild steel, Aluminium

1. INTRODUCTION

Almost every machine that converts reciprocating motion into rotation, or the other way round, has to deal with a torque that is not steady. In a four-stroke engine, for example, only one stroke in four produces useful work, and a punching press draws a burst of energy over a very short part of its cycle. Without something to absorb these swings, the shaft would speed up and slow down noticeably. The flywheel is the simple and dependable answer to that problem. It is a heavy rotating disc or wheel that takes in surplus energy when the torque is high and returns it when the torque falls [7], [8].

1.1 Working principle of a flywheel

The energy held by a rotating body depends on how its mass is distributed and how fast it spins. For a flywheel of mass moment of inertia I turning at angular velocity ω, the stored kinetic energy is given by equation (1). Since speed enters as a square, a modest increase in rotational speed raises the stored energy quickly, but it raises the internal stress by the same square law [1].

$$E = \tfrac{1}{2} I \omega^2 \quad (1)$$

Designers usually describe how steady a machine must run through the coefficient of fluctuation of speed, defined in equation (2) from the highest, lowest and mean angular speeds in a cycle. Once the allowed fluctuation and the energy that must be absorbed per cycle (ΔE) are known, the required inertia follows from equation (3) [7].

$$C_s = (\omega_{max} - \omega_{min}) / \omega_{mean} \quad (2)$$

$$I = \Delta E / (C_s \omega_{mean}^2) \quad (3)$$

To get a large inertia without making the wheel unreasonably heavy, the mass is pushed towards the rim, which is why most flywheels have a thick outer ring joined to a light web or spokes and a central hub. The bolt holes drilled in the web serve two jobs: they remove material where it is not needed and they allow the wheel to be fastened or balanced.

1.2 Materials for flywheels

Grey cast iron has been the traditional choice for industrial and automotive flywheels. It is cheap, casts well into complicated shapes, damps vibration and has good compressive strength, although it is brittle in tension. Steel, whether mild or alloyed, has higher stiffness and strength and is common where speeds are higher or shock loads are expected. Aluminium alloys are far lighter and are used when low weight matters more than stored energy, such as in some motorsport and small-engine applications. At the very high speeds found in energy storage systems, fibre reinforced composites are now preferred because of their high strength-to-density ratio [1], [2], [3]. For ordinary machine flywheels, however, the

choice is usually between iron, steel and aluminium, and that is the comparison made in this paper.

1.3 Finite element analysis of flywheels

A flywheel rotates, so every particle of it experiences a centrifugal body force. The resulting stress field is far from uniform because of the hub, the bore and the bolt holes, and a hand calculation based on a thin ring ignores these local effects. The finite element method divides the component into a large number of small elements and solves the equilibrium equations numerically, which makes it possible to see where stress concentrates and how much the wheel deforms [10]. Several researchers have used this approach for flywheels. Bhutto et al. compared solid and hollow flywheels in cast iron and grey cast iron using ANSYS and found that the solid wheel behaved better [5]. Hatem et al. replaced circular cut-outs by radial slots in a grey cast iron flywheel to cut weight while lowering peak von Mises stress [6]. Reviews of flywheel energy storage show that the same questions of material, geometry and speed limit continue to drive the field [2], [3], [4].

1.4 Objectives of the present study

Most published studies look at one material or at one geometric change. The aim of this paper is to take one clearly defined flywheel and examine how the choice of material alone changes its structural response. The specific objectives are (i) to build a three-dimensional model of the flywheel from its engineering drawing, (ii) to run a static structural analysis for cast iron, mild steel and aluminium under the same conditions, (iii) to compare total deformation, equivalent elastic strain, equivalent von Mises stress and normal stress for the three materials, and (iv) to judge the suitability of each material from stress levels, safety margin and mass.

2. GEOMETRY AND MATERIAL DATA

2.1 Geometry of the flywheel

The flywheel was drawn in SolidWorks from the engineering drawing prepared for this study. It is a disc with an outer diameter of 200 mm and a face width of 50 mm. A circular step of 170 mm diameter is cut on the face, which leaves a raised rim around the outside. At the centre sits a hub of 70 mm outer diameter with a 50 mm bore for the shaft, and the hub projects 20 mm beyond the disc on each side so that its total length is 90 mm. Six holes of 20 mm diameter are spaced at 60 degree intervals on a 110 mm pitch circle in the web. The front and side views of the model are shown in Fig -1 and Fig -2, and the main dimensions are collected in Table -1.

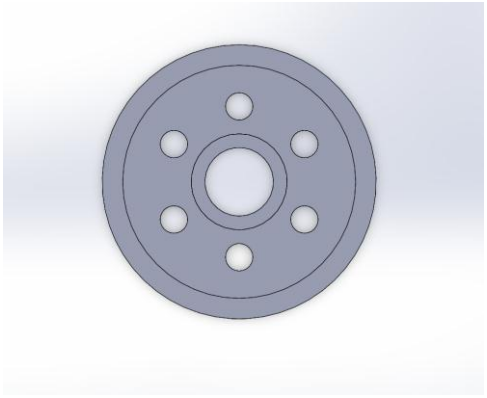

Fig -1: Front view of the flywheel model

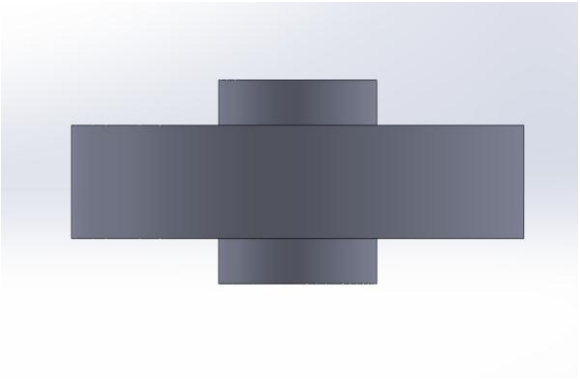

Fig -2: Side view of the flywheel model showing the projecting hub

Table -1: Main dimensions of the flywheel

Feature	Dimension (mm)
Outer diameter of disc	200
Diameter of face step	170
Face width of disc	50
Hub outer diameter	70
Total hub length	90
Bore diameter	50
Number of holes	6
Diameter of each hole	20
Pitch circle diameter of holes	110

2.2 Material properties

The three materials were assigned from the standard engineering data library of ANSYS and are listed in Table -2. All three were treated as linear, elastic and isotropic, which is a fair assumption because the stresses found in this study lie far below the elastic limit. The strength figure in the last row is the tensile ultimate strength for cast iron, which has no clear yield point, and the yield strength for mild steel and aluminium [8], [11].

Table -2: Material properties used in the analysis

Property	Cast iron	Mild steel	Aluminium
Density (kg/m^3)	7200	7850	2770
Young's modulus (GPa)	110	200	71
Poisson's ratio	0.28	0.30	0.33
Strength (MPa)	240	250	280

3. FINITE ELEMENT METHODOLOGY

3.1 Meshing

The CAD model was imported into the static structural system of ANSYS 2026 R1 Student. The body was meshed with a hexahedral-dominant mesh, with elements concentrated around the bolt holes, the hub and the rim where gradients are steep, as can be seen in the result plots. The same mesh was used for all three materials so that any difference in the results comes from the material and not from the discretisation.

3.2 Loading and boundary conditions

A flywheel in service is held on its shaft and loaded mainly by its own rotation. This was reproduced by fixing the bore surface, which acts as the shaft seat, and applying a rotational velocity of ω = _ rad/s about the axis of the bore as an inertial load. The same speed was applied to every material, so the three simulations differ only in density, stiffness and Poisson's ratio. The solution time was one step of 1 s, which is the usual setting for a static analysis.

3.3 Governing relations

For a thin rotating ring the hoop stress produced by centrifugal action is approximately that of equation (4), and the radial growth follows equation (5) [9]. A real disc with a hub and holes deviates from this, but the scaling remains useful: stress changes in proportion to density, and deformation in proportion to the ratio of density to Young's modulus.

$$\sigma \approx \rho\, \omega^2\, r^2 \qquad (4)$$

$$\delta \approx \rho\, \omega^2\, r^3 / E \qquad (5)$$

To judge whether the combined stress state is acceptable, ANSYS reports the equivalent von Mises stress given in equation (6), where σ_1, σ_2 and σ_3 are the principal stresses. This value is compared with the strength of the material [10].

$$\sigma_v = \sqrt{[\ \tfrac{1}{2}\ (\ (\sigma_1-\sigma_2)^2 + (\sigma_2-\sigma_3)^2 + (\sigma_3-\sigma_1)^2\ )\ ]} \qquad (6)$$

4. RESULTS AND DISCUSSION

For every material four contour plots were extracted: total deformation, equivalent elastic strain, equivalent von Mises stress and normal stress in the X direction. In all plots red marks the highest value and blue the lowest. The maximum and minimum values printed on each legend are collected in Table -3 later in this section.

4.1 Cast iron

Fig -3 shows the total deformation of the cast iron flywheel. The displacement grows steadily from zero at the fixed bore to its largest value of 0.00017196 mm at the outer rim, which is exactly what is expected when the outer material has the largest radius and nothing restrains it. The equivalent elastic strain in Fig -4 peaks around the edges of the holes nearest the hub, with a minimum of 2.8495 × 10^{-8} mm/mm in the rim. The same hole edges carry the highest von Mises stress of 0.74531 MPa in Fig -5, while the rim and the outer part of the web remain lightly loaded. The normal stress along the X axis in Fig -6 reaches 0.76206 MPa near the bore and falls to a small compressive value of −0.093917 MPa in two patches on the rim, which indicates local bending of the rim as the web pulls on it.

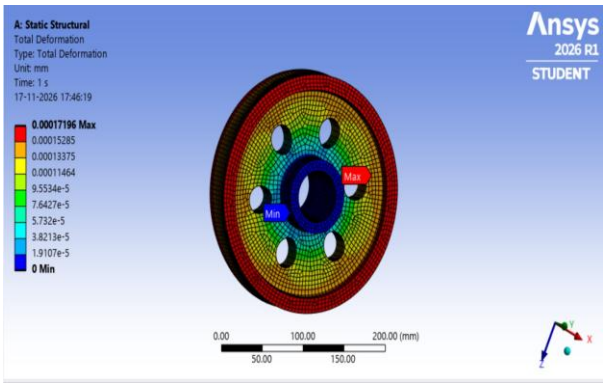

Fig -3: Total deformation of the cast iron flywheel

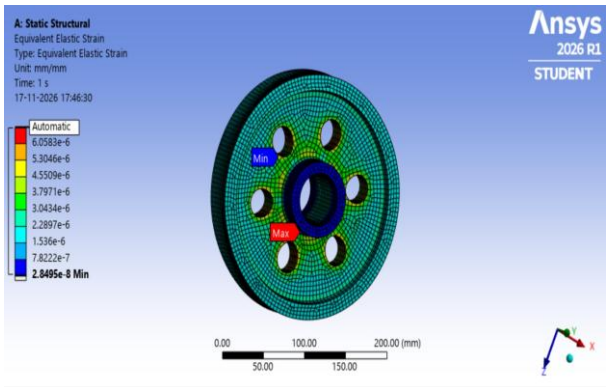

Fig -4: Equivalent elastic strain of the cast iron flywheel

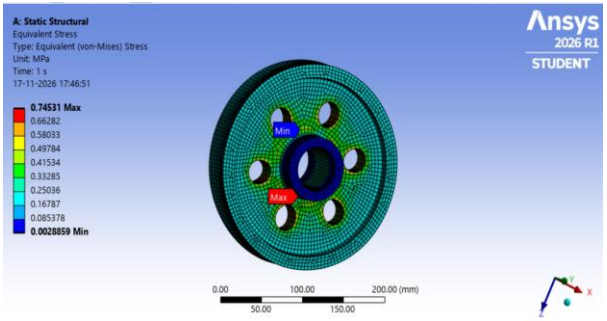

Fig -5: Equivalent (von Mises) stress of the cast iron flywheel

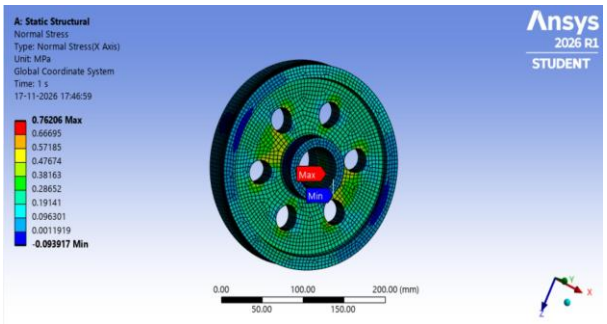

Fig -6: Normal stress (X axis) of the cast iron flywheel

4.2 Mild steel

The mild steel flywheel, Fig -7 to Fig -10, shows the same pattern of loading but with different magnitudes. Its peak total deformation is 0.00010117 mm, about 41 percent lower than for cast iron, because steel is much stiffer. The equivalent von Mises stress, however, is the highest of the three materials at 0.81155 MPa, and the normal stress reaches 0.83165 MPa near the bore, with a compressive minimum of −0.10385 MPa on the rim. The stress is higher than in cast iron because steel is denser, so every part of the wheel pulls harder on the material that holds it. Peak stress and strain again sit at the edges of the holes that are closest to the hub, which makes this the zone to watch in any later design change.

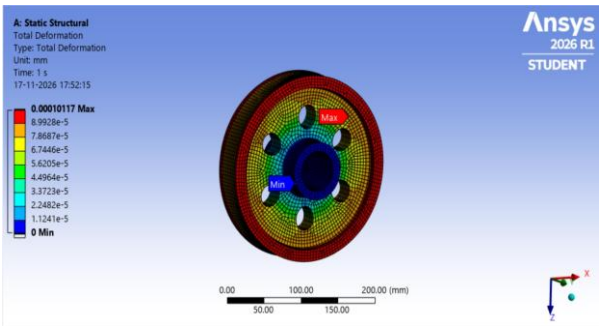

Fig -7: Total deformation of the mild steel flywheel

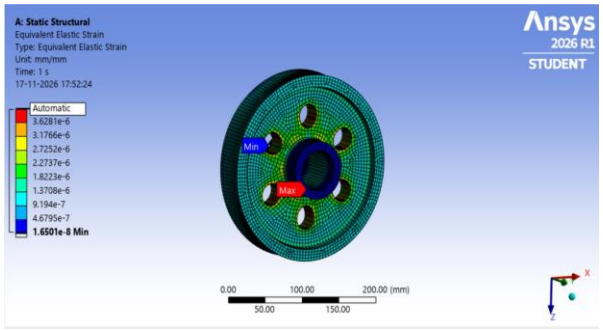

Fig -8: Equivalent elastic strain of the mild steel flywheel

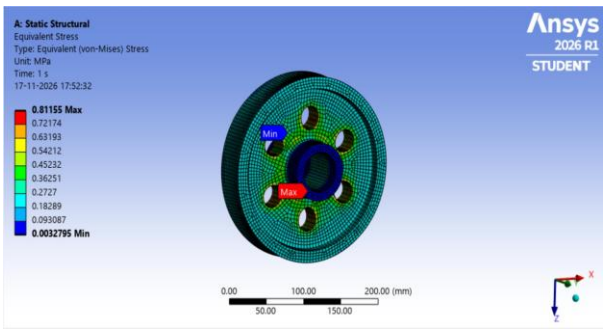

Fig -9: Equivalent (von Mises) stress of the mild steel flywheel

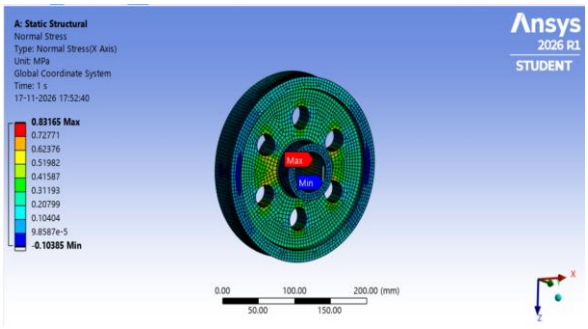

Fig -10: Normal stress (X axis) of the mild steel flywheel

4.3 Aluminium

For the aluminium flywheel, shown in Fig -11 to Fig -14, the stress levels are the lowest of the study. The equivalent von Mises stress peaks at 0.27861 MPa and the normal stress at 0.28658 MPa, roughly one third of the values for mild steel. This is a direct result of its low density, which makes the wheel about a third as heavy and cuts the centrifugal load in the same proportion. Aluminium is also less stiff, but because its density is lower by a similar factor the ratio of the two stays close to that of steel, and the maximum deformation of about 0.0000978 mm is almost the same as for steel. The maximum strain of 4.0594×10^{-6} mm/mm is likewise nearly equal to the steel value.

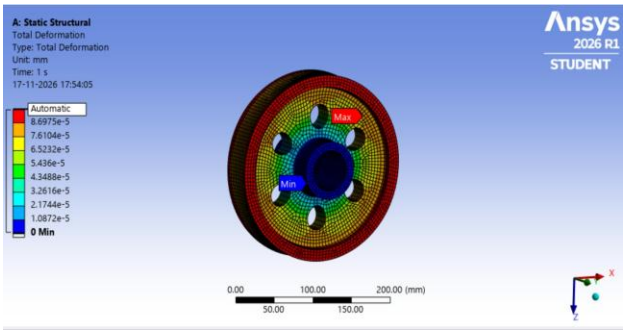

Fig -11: Total deformation of the aluminium flywheel

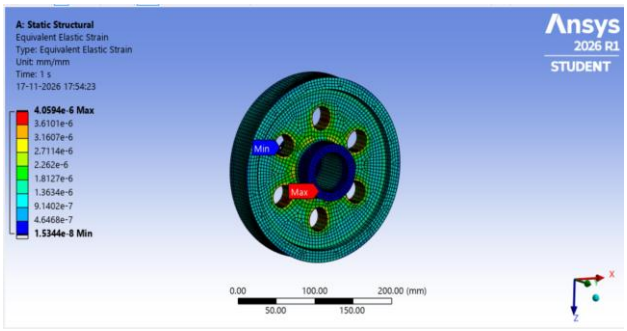

Fig -12: Equivalent elastic strain of the aluminium flywheel

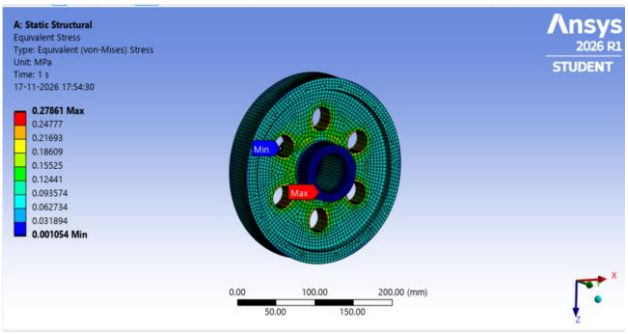

Fig -13: Equivalent (von Mises) stress of the aluminium flywheel

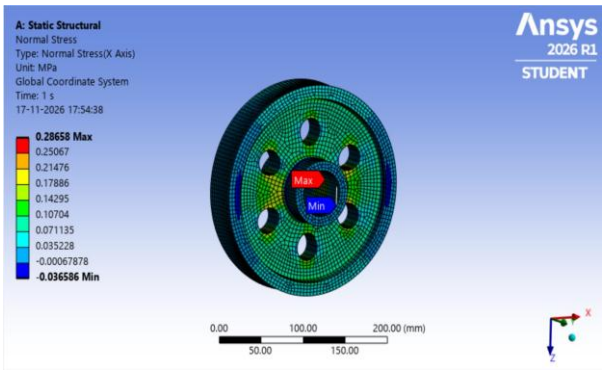

Fig -14: Normal stress (X axis) of the aluminium flywheel

4.4 Comparison of the three materials

The values read from the legends of all twelve plots are summarised in Table -3. The deformation and strain maxima marked with a dagger were not printed in the screenshots because the legend label hid the top box, so they were obtained by extending the regular legend interval by one step and should be treated as close approximations.

Table -3: Maximum and minimum results for the three materials

Result	Cast iron	Mild steel	Aluminium
Total deformation, max ($\times 10^{-4}$ mm)	1.7196	1.0117	0.9785†
Total deformation, min (mm)	0	0	0
Elastic strain, max ($\times 10^{-6}$)	6.8120†	4.0796†	4.0594
Elastic strain, min ($\times 10^{-8}$)	2.8495	1.6501	1.5344
Von Mises stress, max (MPa)	0.74531	0.81155	0.27861
Von Mises stress, min (MPa)	0.0028859	0.0032795	0.001054
Normal stress X, max (MPa)	0.76206	0.83165	0.28658
Normal stress X, min (MPa)	−0.093917	−0.10385	−0.036586

† Estimated from the legend interval.

Chart -1 and Chart -2 present the two most important comparisons graphically. Cast iron is clearly the most flexible of the three, deforming about 70 percent more than mild steel, whereas aluminium and mild steel are practically equal. For stress the order is different: mild steel is highest and aluminium far below both.

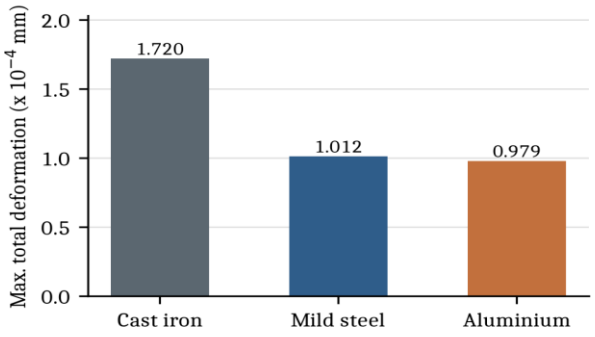

Chart -1: Maximum total deformation for the three materials

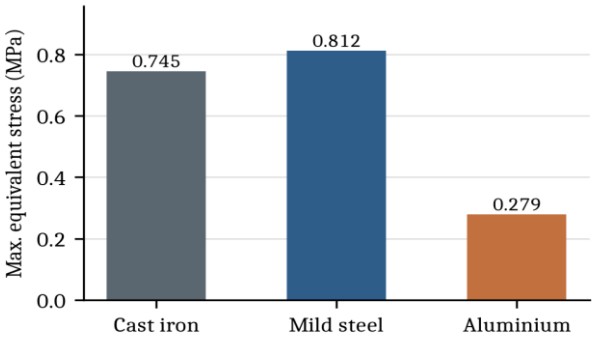

Chart -2: Maximum equivalent (von Mises) stress for the three materials

The size and mass of the flywheel were also used to derive the quantities in Table -4. Mass and mass moment of inertia were calculated from the geometry in Table -1 and the densities in Table -2, ignoring the shallow face step. The indicative factor of safety is the strength in Table -2 divided by the peak von Mises stress. These are approximate numbers meant for comparison between materials and not for certification.

Table -4: Derived comparison of the three flywheels

Quantity	Cast iron	Mild steel	Aluminium
Mass (kg)	10.47	11.41	4.03
Moment of inertia (kg·m²)	0.0547	0.0597	0.0211
Deformation relative to steel	1.70	1.00	0.97
Stress relative to steel	0.92	1.00	0.34
Indicative factor of safety	322	308	1005

4.5 Discussion

A useful check on any finite element result is whether it follows the expected physics. Equations (4) and (5) say that for the same speed and geometry the stress should scale with density and the deformation with density divided by Young's modulus. Relative to mild steel, the density ratios are 0.92 for cast iron and 0.35 for aluminium, and the simulated stress ratios are 0.92 and 0.34. The density-to-modulus ratios are 1.67 and 0.99, and the simulated deformation ratios are 1.70 and 0.97. The close agreement shows that the models respond as the theory predicts and that the numerical set-up is consistent across the three runs.

The location of the peak values is also consistent in all three materials. The largest displacement is at the rim and zero displacement at the fixed bore. The highest stress and strain occur at the hub-side edges of the bolt holes, where the web narrows between a hole and the hub and where the load path is interrupted. If the wheel is ever modified, these ligaments should be kept generous or the hole edges given a fillet, because they are the first places where a stress concentration would grow.

From the energy-storage point of view, the stored energy at a given speed is proportional to the moment of inertia. The cast iron and mild steel wheels, at 0.0547 and 0.0597 kg·m², hold roughly 2.6 and 2.8 times the energy of the aluminium wheel at 0.0211 kg·m² when all run at the same speed. Aluminium therefore makes sense where weight, starting effort and low stress are priorities, but it would need a larger diameter or a higher speed to match the energy capacity of the iron or steel versions. Cast iron remains attractive because it is the cheapest to produce and damps vibration, and its higher deformation is still tiny in absolute terms.

It is worth noting that every stress in this study stays below 1 MPa, which is a tiny fraction of the strength of the materials, and the factors of safety in Table -4 run into hundreds. The design is therefore very conservative at the applied speed. This is a static analysis; fatigue from repeated start-stop cycles, torsional loading from the drive, thermal effects and resonance were not considered and should be studied before a design is released for service.

5. CONCLUSIONS

A flywheel of 200 mm diameter was analysed in ANSYS 2026 R1 Student for three materials under identical geometry, mesh, support and rotational loading, and the following conclusions can be drawn.

1) In all three cases the maximum deformation occurs at the outer rim and the maximum stress and strain occur at

the hub-side edges of the bolt holes, so the load path and local geometry matter more than the material when it comes to where the flywheel is most loaded.

2) Cast iron shows the highest deformation, 0.00017196 mm, followed by mild steel at 0.00010117 mm and aluminium at about 0.0000978 mm. The first is about 70 percent above the second, and the last two are almost equal.

3) Mild steel carries the highest equivalent stress, 0.81155 MPa, then cast iron with 0.74531 MPa and aluminium with 0.27861 MPa. The ordering follows density, as the theory of rotating discs predicts, and the simulated ratios agree with the analytical ones to within a few percent.

4) All three materials work far below their strength, with indicative factors of safety of about 322 for cast iron, 308 for mild steel and above 1000 for aluminium. The flywheel is safe at the applied speed and could be lightened further.

5) Aluminium gives a flywheel of about 4 kg against 10 to 11 kg for the other two, but stores only about 35 to 40 percent of the energy at the same speed. Cast iron and mild steel are the better choices where inertia is the main requirement, and aluminium where weight is.

Future work can include modal and fatigue analysis, optimisation of the web and hole pattern, and testing of composite or hybrid rims at higher speeds.

ACKNOWLEDGEMENT

The authors thank the Department of Mechanical Engineering, Vishwakarma Institute of Technology, Pune, for providing the software and computing facilities used in this work, and for the encouragement and guidance received throughout the study.

REFERENCES

1) M. Skinner and P. Mertiny, “Energy storage flywheel rotors mechanical design,” Encyclopedia, vol. 2, no. 1, 2022, pp. 301-324, doi:10.3390/encyclopedia2010019.

2) X. Li and A. Palazzolo, “A review of flywheel energy storage systems: state of the art and opportunities,” Journal of Energy Storage, vol. 46, 2022, Art. no. 103576.

3) S. M. Mousavi G., F. Faraji, A. Majazi, and K. Al-Haddad, “A comprehensive review of flywheel energy storage system technology,” Renewable and Sustainable Energy Reviews, vol. 67, 2017, pp. 477-490.

4) A. Amiryar and K. Pullen, “A review of flywheel energy storage system technologies and their applications,” Applied Sciences, vol. 7, no. 3, 2017, Art. no. 286, doi:10.3390/app7030286.

5) D. A. Bhutto, J. Soomro, M. Ahmed, M. Nasir, A. Kumar, S. Rajper, and A. Rehman, “Mechanical analysis of solid and hollow shaped flywheels made through cast iron and gray cast iron through simulation,” Technical Journal (UET Taxila), vol. 30, no. 4, 2025, pp. 14-22.

6) S. Y. Hatem, A. S. N. Almurshedi, and H. A. K. Saad, “Finite element optimization of flywheel employed in internal combustion engines,” EPJ Web of Conferences, vol. 345, 2026, Art. no. 01032, doi:10.1051/epjconf/202634501032.

7) V. B. Bhandari, Design of Machine Elements, 4th ed. New Delhi, India: McGraw-Hill Education, 2017.

8) R. G. Budynas and J. K. Nisbett, Shigley’s Mechanical Engineering Design, 11th ed. New York, NY: McGraw-Hill Education, 2020.

9) S. P. Timoshenko and J. N. Goodier, Theory of Elasticity, 3rd ed. New York, NY: McGraw-Hill, 1970.

10) R. D. Cook, D. S. Malkus, M. E. Plesha, and R. J. Witt, Concepts and Applications of Finite Element Analysis, 4th ed. New York, NY: Wiley, 2002.

11) W. D. Callister Jr. and D. G. Rethwisch, Materials Science and Engineering: An Introduction, 10th ed. Hoboken, NJ: Wiley, 2018.